Township of East Rockhill

NOTE: Refer to Trench Restoration Specifications of Detail Sheet S-16, Typical Paving Specifications Provided on Detil Sheet S-19.

(PLAN VIEWS)

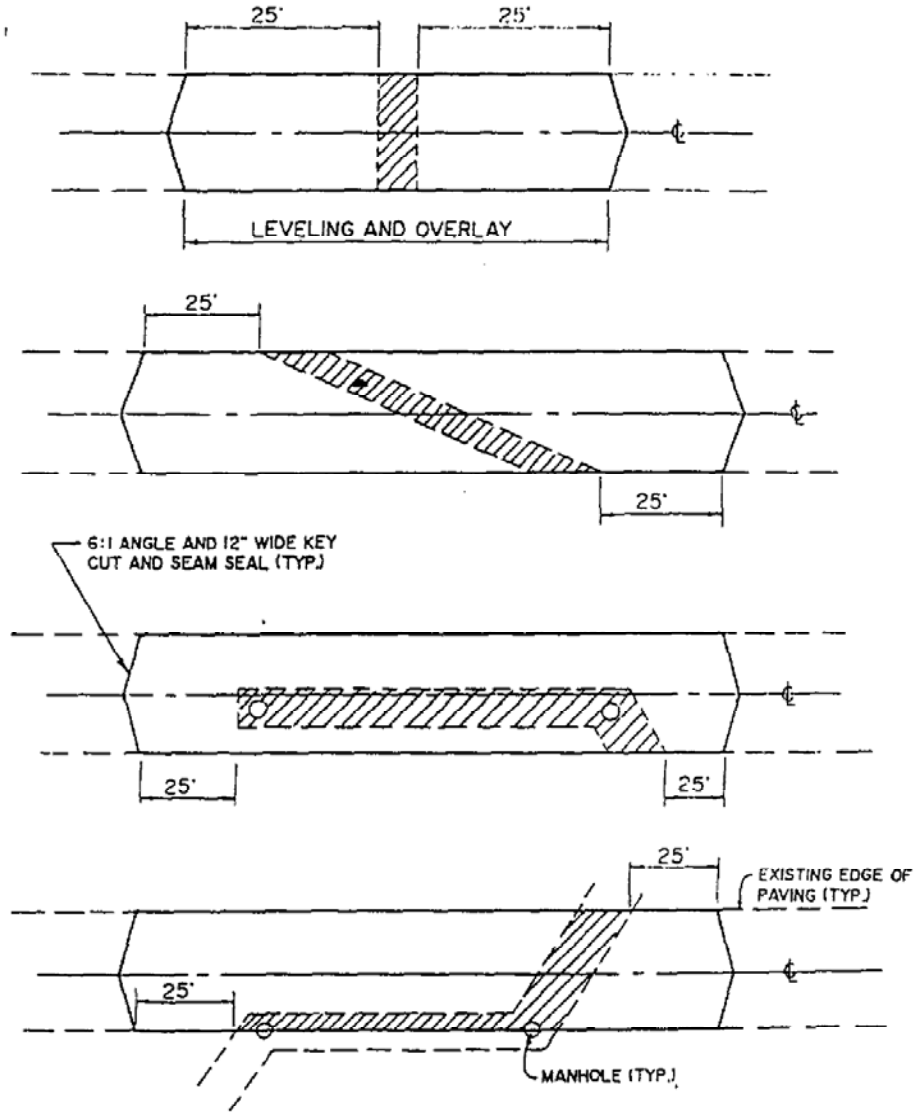

EAST ROCKHILL TOWNSHIP SEWER STANDARDS

SCALE: Not to Scale	EXAMPLES OF FULL WIDTH CARTWAY OVERLAY REQUIREMENTS	S-18
DATE: 1/92		DWG. No.